VONDOM

Products / Sofas / Gum Sofa

Gum sofa

by Ramón Esteve



Info

Description

Weight: 31.6 Kg

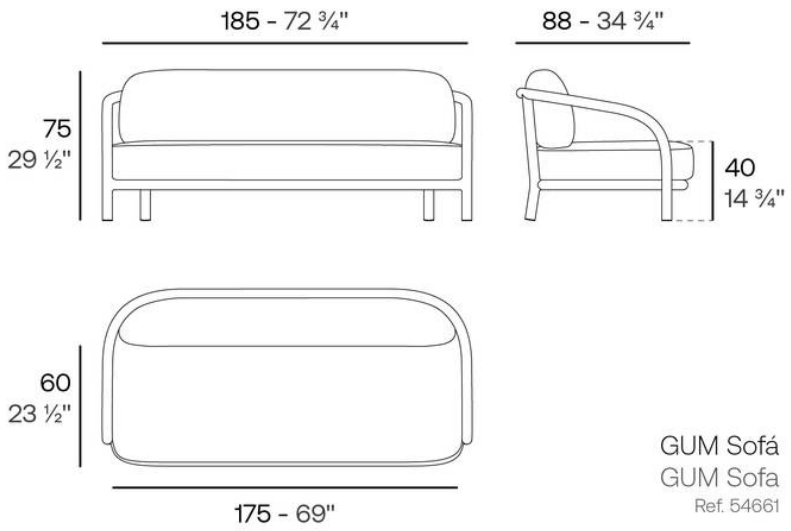

VONDOM

Finishes

finishes

Aluminium
Ref. 54661

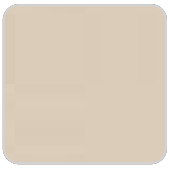
ecru


dark tortora

Lacquered aluminium profile.

fabric

GUM
Ref. 54661CO


ecru 10148


tortora 10149

Group 1C. 100% acrylic fabric, with a distintive irregular marbled pattern and a soft feel.

Ambients















