Faz double bar

by Ramón Esteve

Vondom's Faz collection, designed by Ramón Esteve, is one of the firm's most iconic collections. It stands out for its modular design and sophistication, representing harmony, serenity and timelessness through mineral and emphatic shapes. Faz transforms environments with its unique combination of material and light, creating an enveloping and exclusive atmosphere.

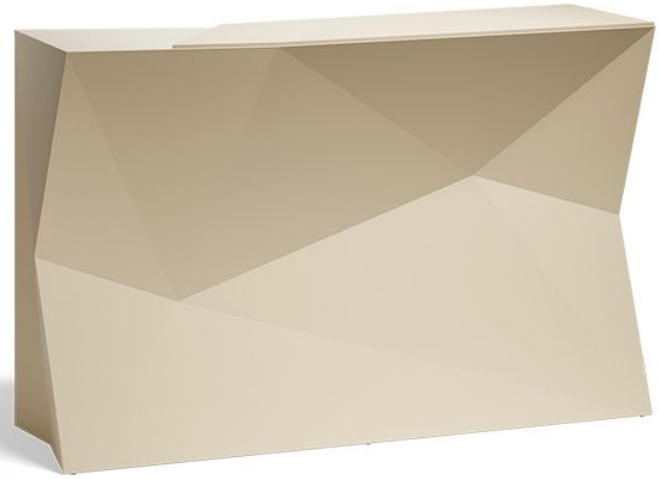

VONDOM

Info

Description

Made of polyethylene resin by rotational moulding. 100% Recyclable. Item suitable for indoor and outdoor use. Available in different finishes.

Weight: 54.09 Kg

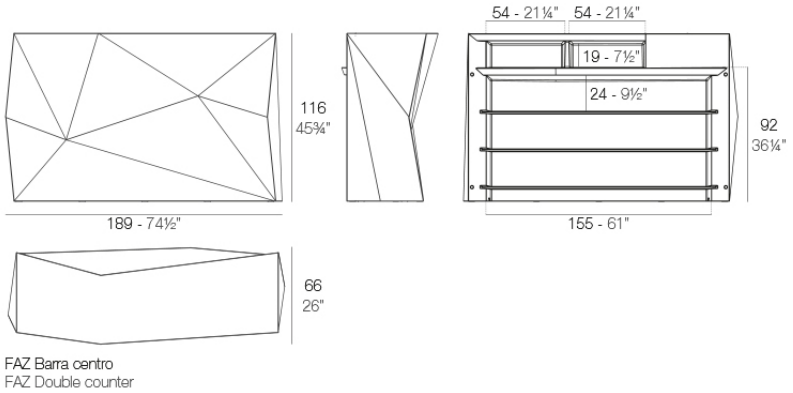

FAZ Barra centro
FAZ Double counter

Combinations

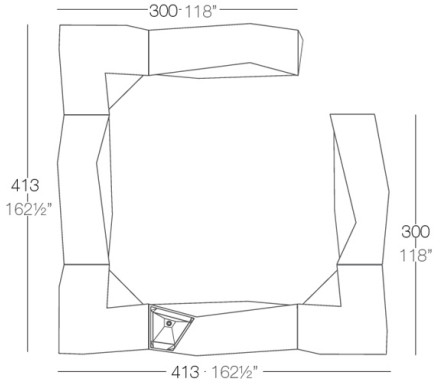

2 X 54113
1 X 54114
3 X 54112
1 X 54111

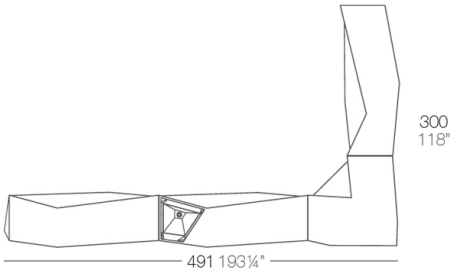

1 X 54113
1 X 54114
1 X 54112
1 X 54111

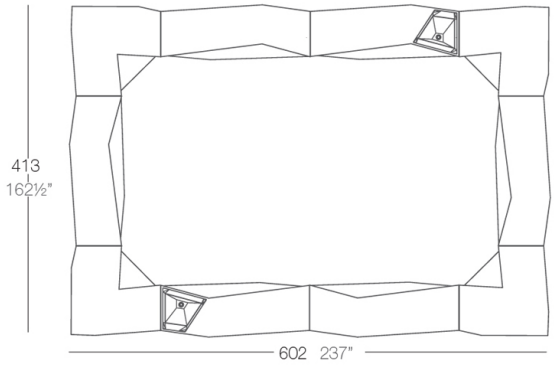

4 X 54113
2 X 54114
4 X 54112

Accessories

- **BLUETOOTH**

  Link your smartphone or tablet to the sound system via Bluetooth.

- **TOP**

  HPL Solid Core Top

- **SHELVES**

VONDOM

Finishes

finishes

Basic
Ref. 54113

white 2001


black 2002


ecru 2003


tortora 2004


gray 2005


anthracite 2006


brown 2008


garnet 2015


green 2016

cream 2017


blue 2018


camel 2020


clay 2022


ecru granite


cream granite

ice 2101

Matt Polyethylene

Lacquered
Ref. 54113F

white 3101


black 3102

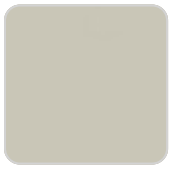
ecru 3103

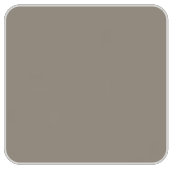
tortora 3104


gray 3105


anthracite 3106


garnet 3113

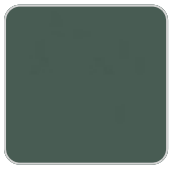
green 3116

cream 3117


blue 3118

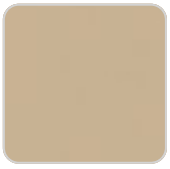
camel 3120

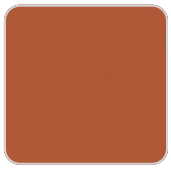
clay

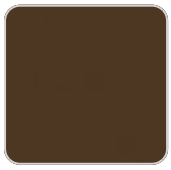
brown 3125

Lacquered Polyethylene

lighting

Led – White
Ref. 54113W

ice 2101

White internally lit unit with LED technology. Available only in matte ice white finish.

LED RGBW – Cable
Ref. 54113L

ice 2101

Unit with internal lighting with RGBW LED technology and remote control unit for switching colors. Available only in matte ice white finish. Remote control included.

LED RGBW DMX – Cable
Ref. 54113D

ice 2101

Unit with internal lighting with RGBW LED technology and remote control unit for switching colors. Also controlLED by DMX-1024 (wireless), enabling communication between one or more products simultaneously via the DMX transmitter (not included). There are two options to choose from: Professional XLR DMX and Home WIFI DMX. (Remote control included).
Optional battery

LED RGBW – Battery
Ref. 54113Y

ice 2101

Unit with internal lighting with battery-powered RGBW LED technology. Includes charger and remote control for switching colors and charger. Available only in matte ice white finish.
LED RGBW DMX – Battery

Ref. 54113DY

ice 2101

Unit with internal lighting with RGBW LED technology and remote control unit for switching colors. Also controlLED by DMX-1024 (wireless), enabling communication between one or more products simultaneously via the DMX transmitter (not included). There are two options to choose from: Professional XLR DMX and Home WIFI DMX. (Remote control included).

tabletops

HPL Black Edge Top
Ref. 54113E



white (white edge)



white(black edge)



ecru(black edge)



ecru



tortora



smoked



cream



garnet



brown



green



blue



black(black edge)



anthracite



white stone



ecru stone



tortora stone



gray stone



black stone



oak1



oak2

VONDOM

HPL black edge

HPL Solid Core Top
Ref. 54113Z


white (white edge)


ecru


tortora


smoked


cream


garnet


brown


green


blue


anthracite


white stone


ecru stone


tortora stone


gray stone


black stone


oak1


oak2

HPL solid core

ruedas

WHEELS
Ref. 56001B

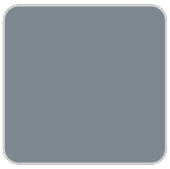

gray 2005

VONDOM

Ambients







