Gum coffee table 75x120x30

by Ramón Esteve



VONDOM

Info

Description

Weight: 11 Kg

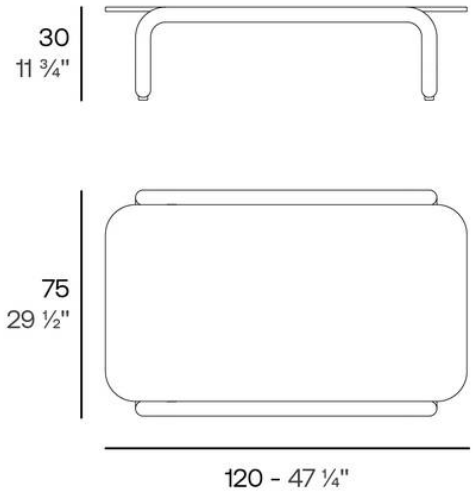

GUM Mesa café baja
GUM Low coffee table
Ref. 54664

Finishes

finishes

Aluminium
Ref. 54664

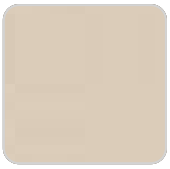
ecru


dark tortora

Lacquered aluminium profile.

Ambients















