Fusta side table ø60x73h

by Ramón Esteve

Fusta is a contemporary reinterpretation of wood. It doesn't imitate it — it translates it. It takes its warmth, its rhythm, and its connection to the landscape and carries them into a modern language designed to endure outdoors.



VONDOM

Info

Description

Weight: 7.5 Kg

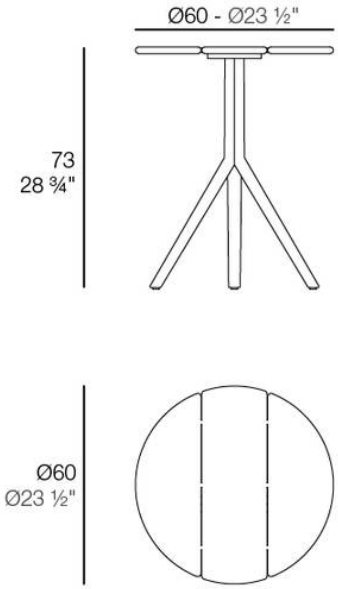

FUSTA Mesa Ø60
FUSTA Table Ø23 ½"
Ref. 54880

Finishes

finishes

Teak wood
Ref. 54880



natural teak

TEAK WOOD

Ambients

