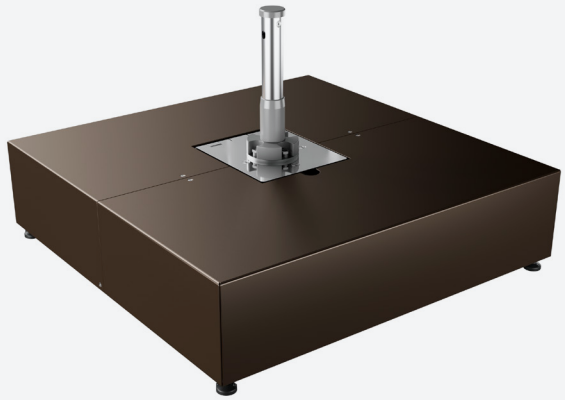

INSTALLATION INSTRUCTIONS

MEGA MAX FULL ALUMA-CRETE CUBE ANCHOR

ANCHOR TYPE: Above ground base

CONSTRUCTION: Galvanized steel frame, pavers, galvanized steel plates, aluminum full above ground cover, polished stainless steel hinge plate

WIND LOAD: Suitable for winds up to 25 mph. Close when not in use, during storms, and at night

⚠ TO PROTECT YOU AND YOUR PRODUCT, PLEASE READ THE INSTALLATION INSTRUCTIONS BEFORE OPENING THE PARASOL.

Assemble as viewed below

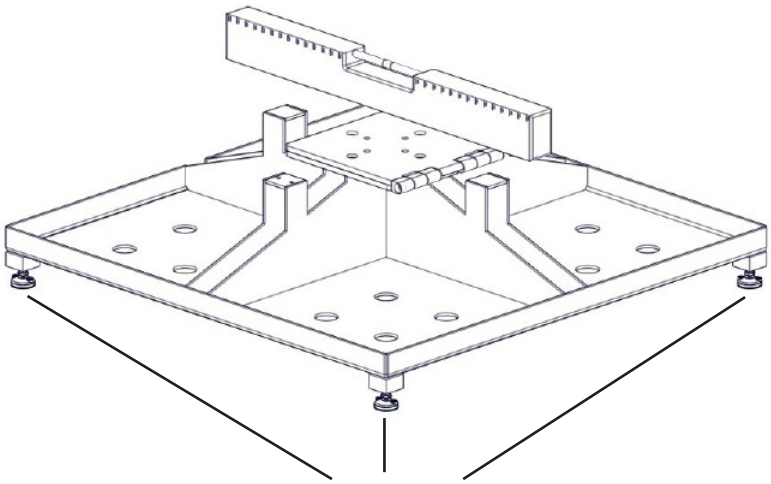

use leveling feet to level
above ground anchor (x4)

MEGA MAX FULL ALUMA-CRETE CUBE ANCHOR

Assemble as viewed below

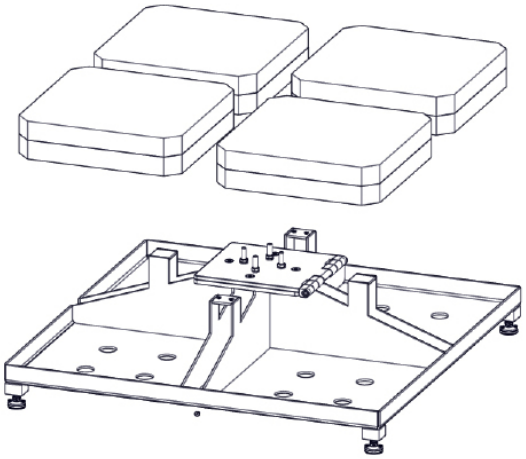

845 LBS
8 PAVERS
FOR USE WITH 16.0’ SQ, 16.0’ RND

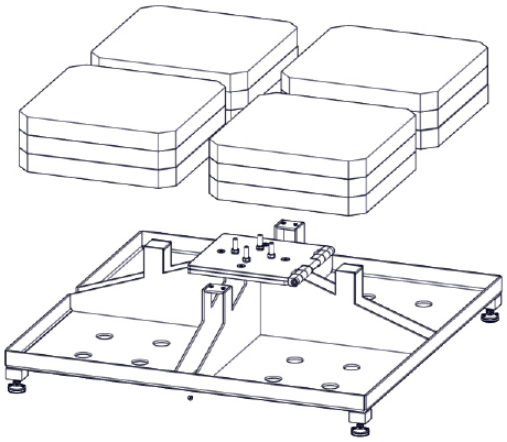

1100 LBS
12 PAVERS
FOR USE WITH 18.0’ SQ, 20.0’ RND
OR SMALLER

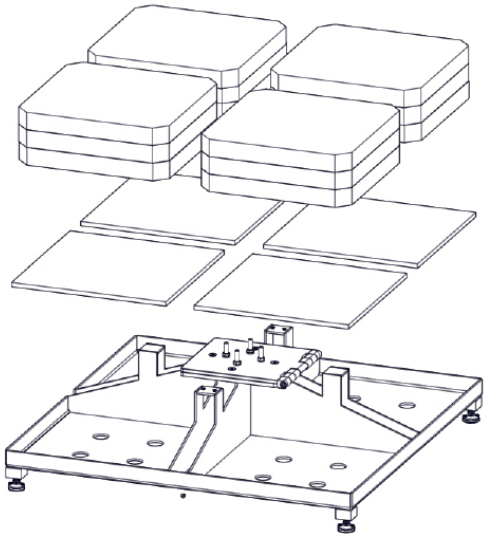

1365 LBS
12 PAVERS & 4 GVS PLATES
FOR USE WITH 20.0’ SQ, 24.0’ RND,
14.0’ X 20.0’ RECT
OR SMALLER

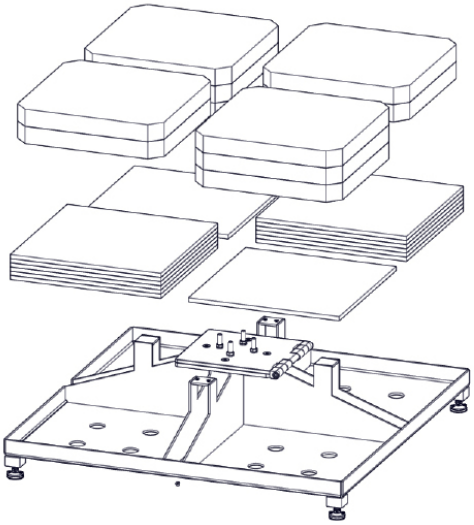

1885 LBS
10 PAVERS & 14 GVS PLATES
FOR USE WITH 24.0’ SQ,
16.0’ X 24.0’ RECT
18.0’ X 24.0’ RECT
OR SMALLER

MEGA MAX FULL ALUMA-CRETE CUBE ANCHOR

Assemble as viewed below

INSTALL THE STAINLESS STEEL SECURITY STEM TO THE STAINLESS STEEL HINGED SURFACE ANCHOR USING THE HARDWARE PROVIDED

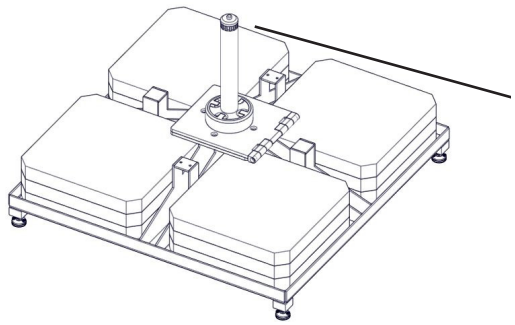

Note: Base stem ships with parasol

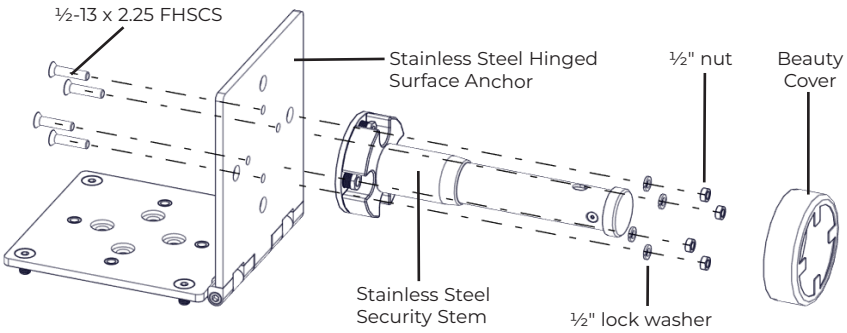

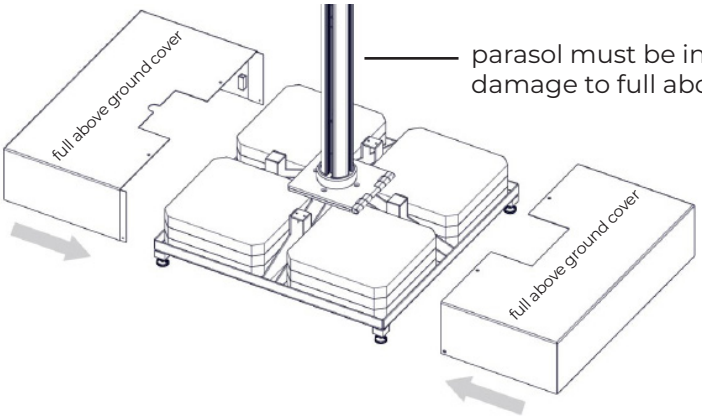

parasol must be installed first to prevent damage to full above ground cover

Secure full above ground cover using six screws.

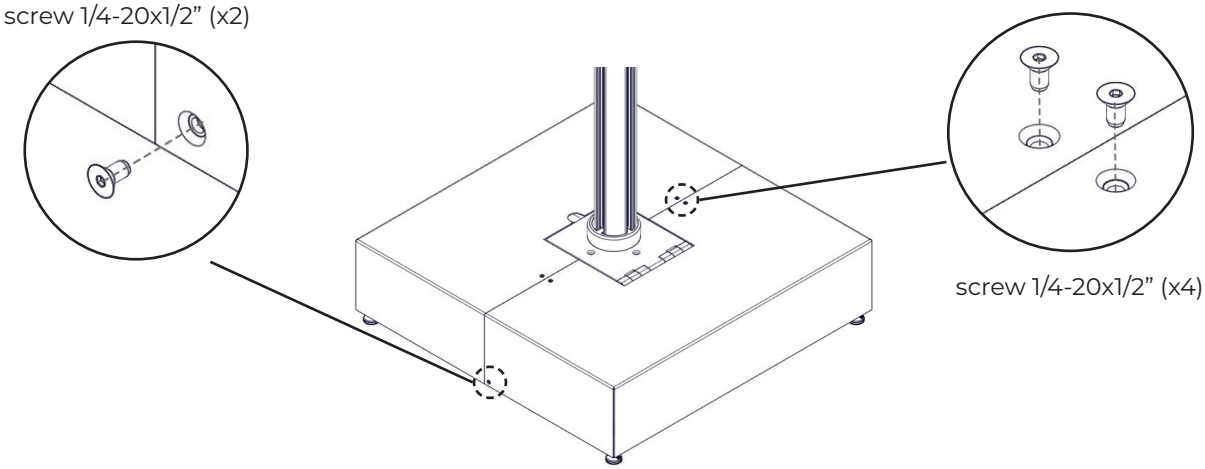

MEGA MAX FULL ALUMA-CRETE CUBE ANCHOR

IF APPLICABLE: STEPS FOR PARASOL WITH ELECTRICAL SYSTEMS
Once the parasol is installed onto the full above ground cover, carefully route electrical cords as shown. The frame and front full above ground cover have cutouts to route the wires.

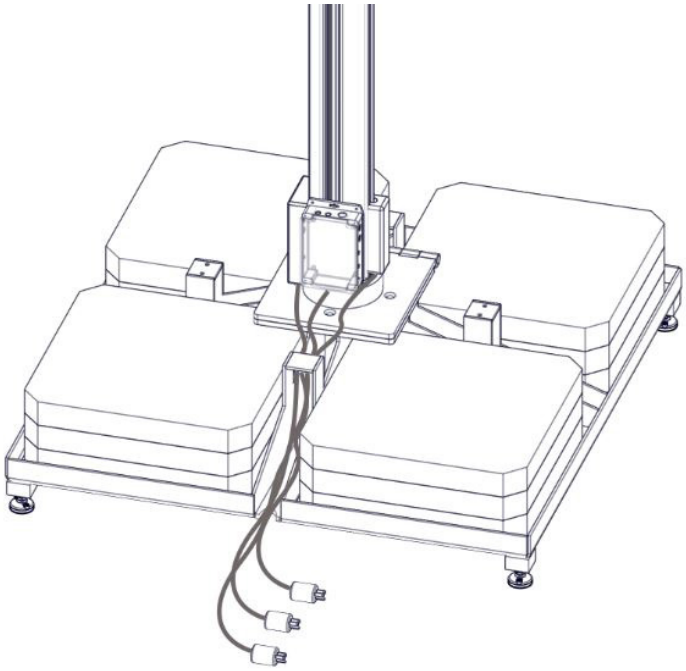
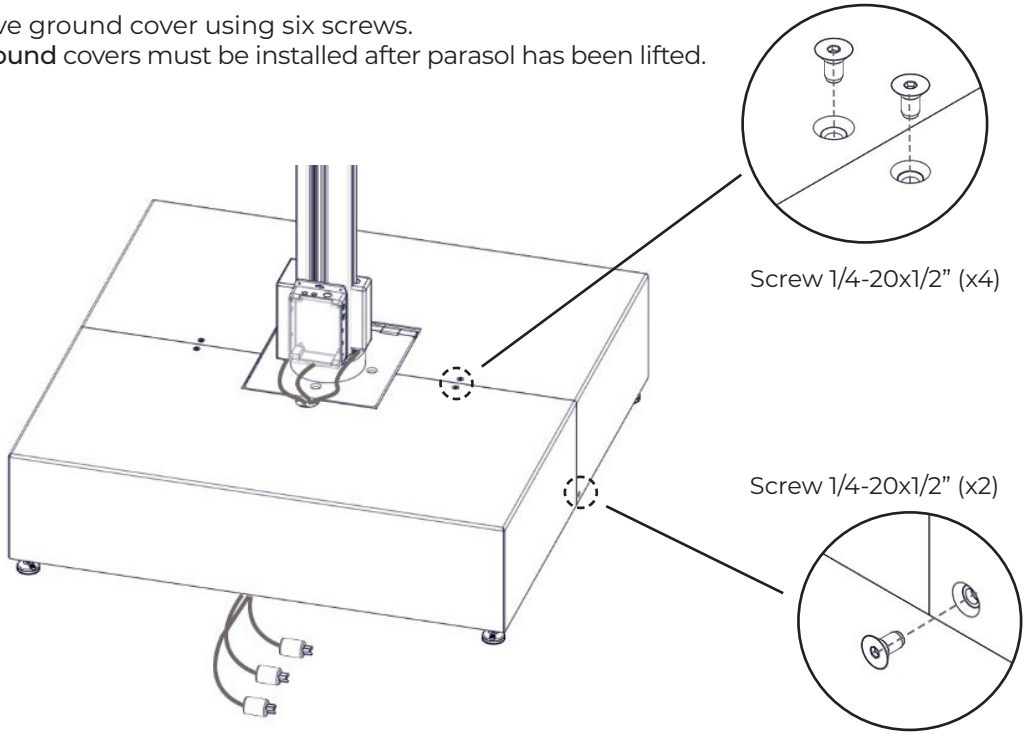
Secure full above ground cover using six screws.
Note: Above ground covers must be installed after parasol has been lifted.