Fiesta

by Archirivolto Design

FIESTA, a designer bar counter by **Archirivolto** for **VONDOM**: “design is beauty, harmony and freedom and cannot therefore be bound by strict, pre-established rules, nor can it only be seen as the privilege of social or cultural elite”.



VONDOM

Info

Description

Made of polyethylene resin by rotational moulding.100% Recyclable. Item suitable for indoor and outdoor use. Available in different finishes.

Modules

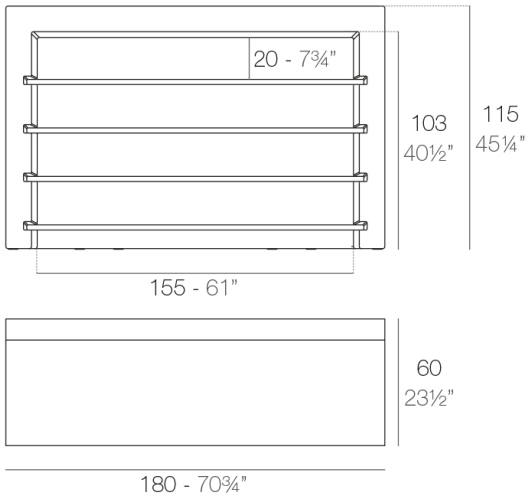

FIESTA 180 Barra
FIESTA 180 Counter

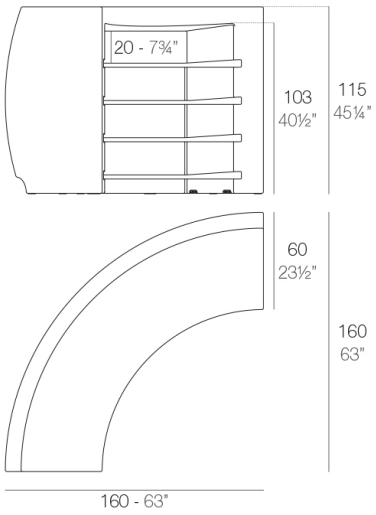

FIESTA Barra curva
FIESTA Curved counter

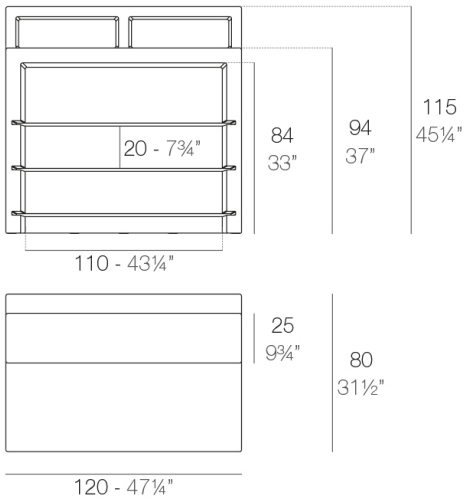

FIESTA 120 Barra
FIESTA 120 Counter

Combinations

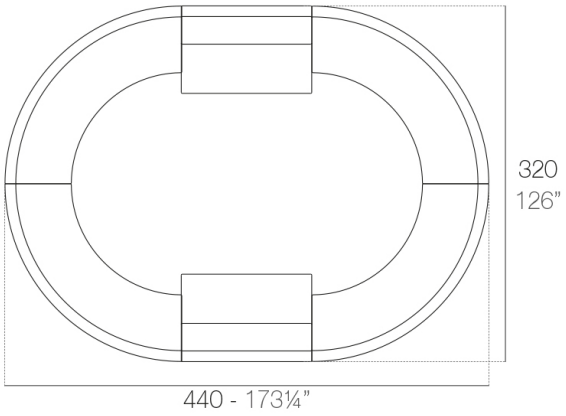

2 x 56023 120 Barra - 120 Counter
4 x 56002 Barra curva - Curved counter

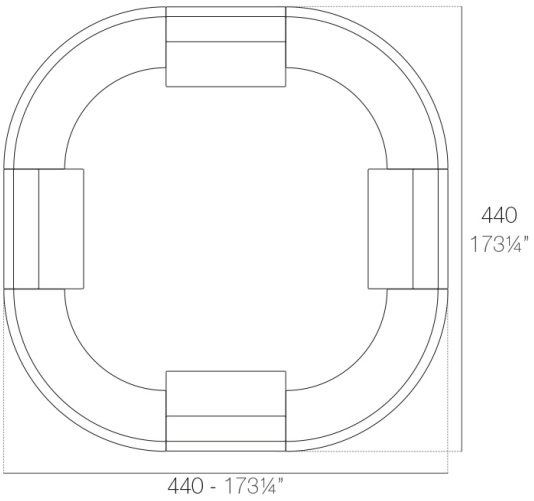

4 x 56023 120 Barra - 120 Counter
4 x 56002 Barra curva - Curved counter

Accessories

- **BLUETOOTH**

  Link your smartphone or tablet to the sound system via Bluetooth.

- **TOP**

  HPL Solid Core Top

- **SHELVES**

Finishes

finishes

Basic

white 2001


black 2002


ecru 2003


tortora 2004


gray 2005


anthracite 2006


brown 2008


garnet 2015


green 2016

cream 2017


blue 2018


camel 2020


clay 2022


ecru granite


cream granite

ice 2101

Matt Polyethylene

Lacquered

white 3101


black 3102

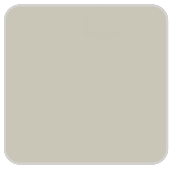
ecru 3103

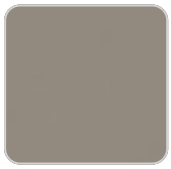
tortora 3104


gray 3105


anthracite 3106


garnet 3113

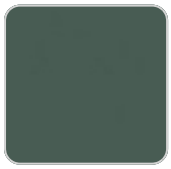
green 3116

cream 3117


blue 3118


brown 3125

Lacquered Polyethylene

lighting

Led – White

ice 2101

White internally lit unit with LED technology. Available only in matte ice white finish.

LED RGBW – Cable

ice 2101

Unit with internal lighting with RGBW LED technology and remote control unit for switching colors. Available only in matte ice white finish. Remote control included.

LED RGBW DMX – Cable

ice 2101

Unit with internal lighting with RGBW LED technology and remote control unit for switching colors. Also controlLED by DMX-1024 (wireless), enabling communication between one or more products simultaneously via the DMX transmitter (not included). There are two options to choose from: Professional XLR DMX and Home WIFI DMX. (Remote control included).
Optional battery

LED RGBW – Battery

ice 2101

Unit with internal lighting with battery-powered RGBW LED technology. Includes charger and remote control for switching colors and charger. Available only in matte ice white finish.

LED RGBW DMX – Battery

ice 2101

Unit with internal lighting with RGBW LED technology and remote control unit for switching colors. Also controlLED by DMX-1024 (wireless), enabling communication between one or more products simultaneously via the DMX transmitter (not included). There are two options to choose from: Professional XLR DMX and Home WIFI DMX. (Remote control included).

tabletops

HPL Black Edge Top


white (white edge)


ecru


tortora


smoked


cream


garnet


brown


green


blue


anthracite


white stone


ecru stone


tortora stone


gray stone


black stone


oak1


oak2


white(black edge)


ecru(black edge)


black(black edge)

HPL black edge
HPL Solid Core Top


white (white edge)


ecru


tortora


smoked


cream


garnet


brown


green


blue


anthracite


white stone


ecru stone


tortora stone


gray stone


black stone


oak1


oak2

HPL solid core

ruedas

WHEELS

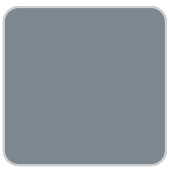
gray 2005

VONDOM

Ambients







