Gum lounge chair

by Ramón Esteve



VONDOM

Info

Description

Weight: 14 Kg

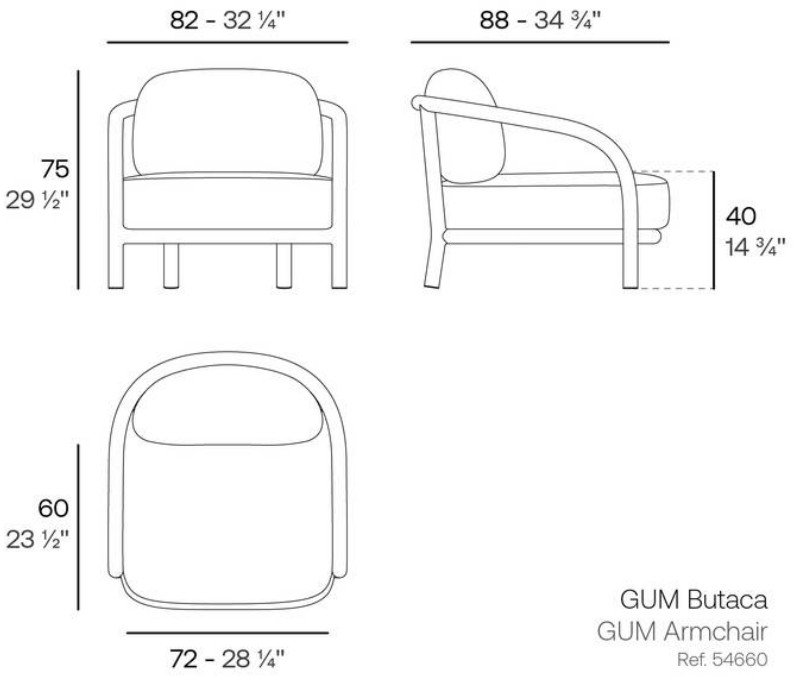

GUM Butaca
GUM Armchair
Ref. 54660

VONDOM

Finishes

finishes

Aluminium
Ref. 54660

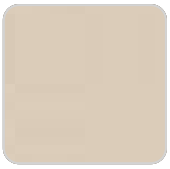
ecru


dark tortora

Lacquered aluminium profile.

fabric

GUM
Ref. 54660CO


ecru 10148


tortora 10149

Group 1C. 100% acrylic fabric, with a distintive irregular marbled pattern and a soft feel.

Ambients















