Fusta dining table

by Ramón Esteve

Fusta is a contemporary reinterpretation of wood. It doesn't imitate it — it translates it. It takes its warmth, its rhythm, and its connection to the landscape and carries them into a modern language designed to endure outdoors.



Info

Description

Weight: 87.5 Kg

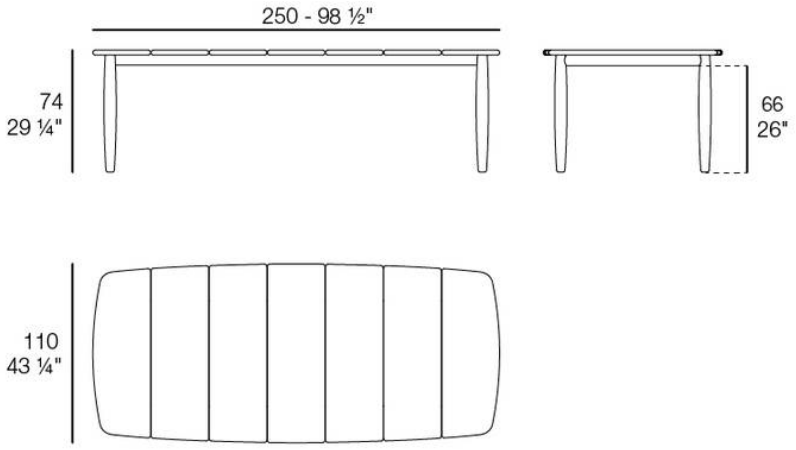

FUSTA Mesa Comedor
FUSTA Dinning Table
Ref. 54875

VONDOM

Finishes

finishes

Teak wood
Ref. 54875



natural teak

TEAK WOOD

Ambients

