Palm table ø60

by Eugeni Quitllet

Palm captures the essence of the open air: lightness that breathes and an organic lattice that lets the breeze pass through. Its language is soft, enveloping, and natural—a gesture that dresses outdoor and indoor spaces with equal ease.



VONDOM

Info

Description

Weight: 6 Kg

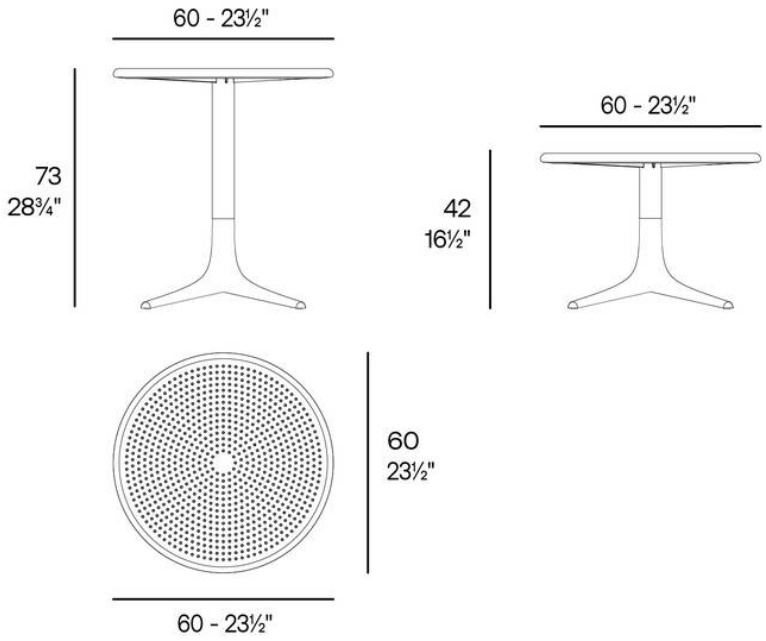

PALM Mesa Ø60
PALM Table Ø60

Finishes

finishes

Basic
Ref. 65066


white

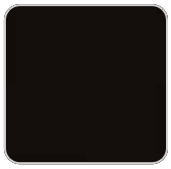
black


ecru


jade


tortora

Available in various colors

Ambients

























