INSTALLATION INSTRUCTIONS

OCEAN MASTER MAX CANTILEVERS
AMBIA™ LED LIGHTS | HEATERS | AUTOMATION

To protect your product, please read the operating instructions before opening the parasol.

AMBIA™ LED LIGHTS | HEATERS | AUTOMATION

Note: Certain models may include a temporary shipping bracket that needs to be removed.

Remove heater brackets

Step 1
Remove all packaging from in and around parasol and lay flat on the floor.
To prevent damage to the parasol, lay a soft cloth or large piece of cardboard on the floor.

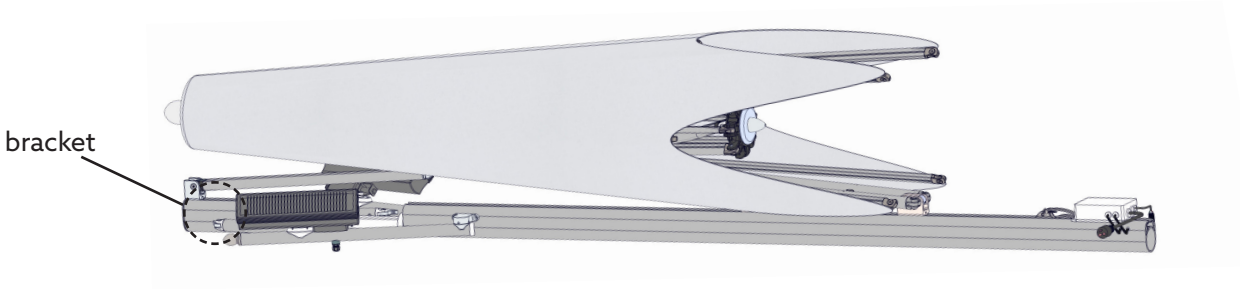

Step 2
Remove hex screw from elbow fitting.

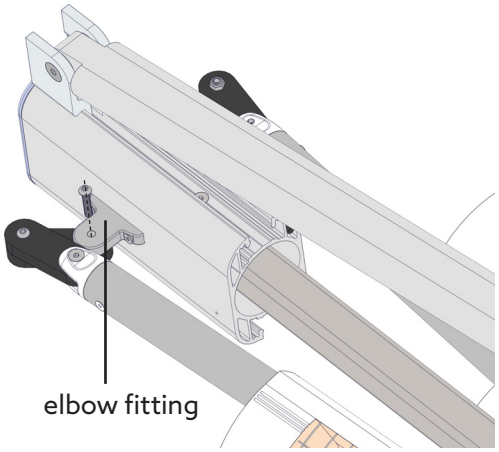

Step 3
Remove flat-head hex screw from heater arm and bracket.
Discard bracket and save screw for next step.

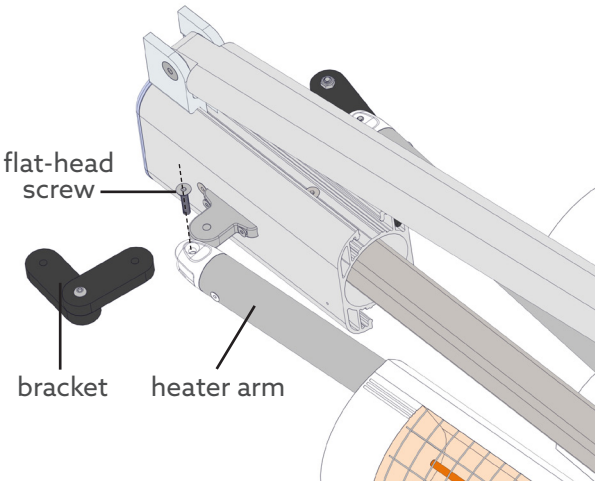

AMBIA™ LED LIGHTS | HEATERS | AUTOMATION

Step 4
Mount heater arm to elbow fitting with a flat-head screw from previous step.

Note: Add a drop of provided Loctite to the end of the screw threads.

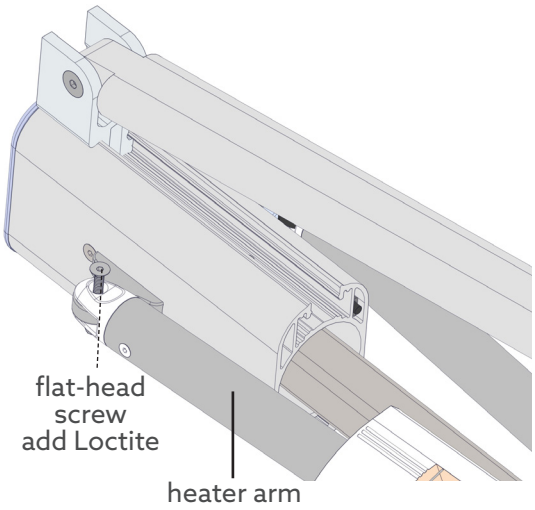

Step 5
Repeat steps 1 through 4 for all heater arms.

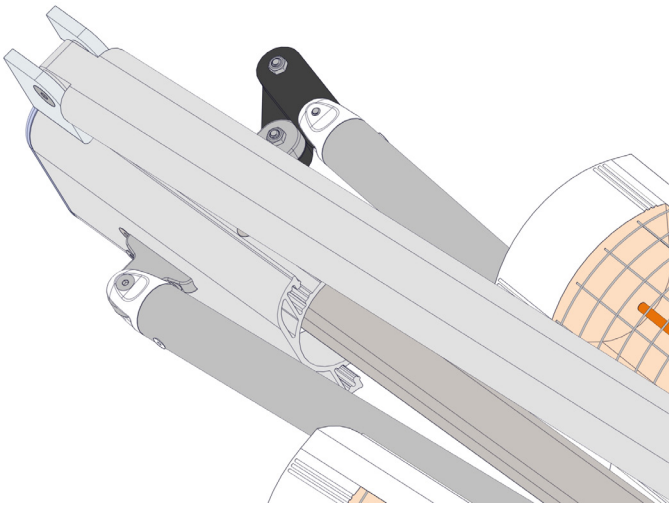

AMBIA™ LED LIGHTS | HEATERS | AUTOMATION

Step 6
Pull pin from cam lock and lift the handle to unlock parasol.

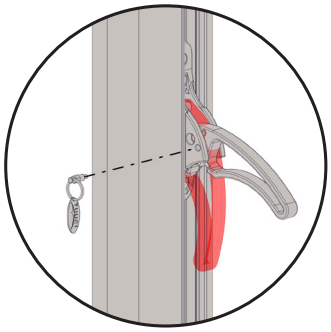

Step 7
Once you have leveled the stem using the anchor installation instructions, slide the beauty cover and parasol over the security stem (security stem is included with parasol).

Note: Ensure that cables are not pinched when inserting the parasol over the security stem and when installing the beauty cover.

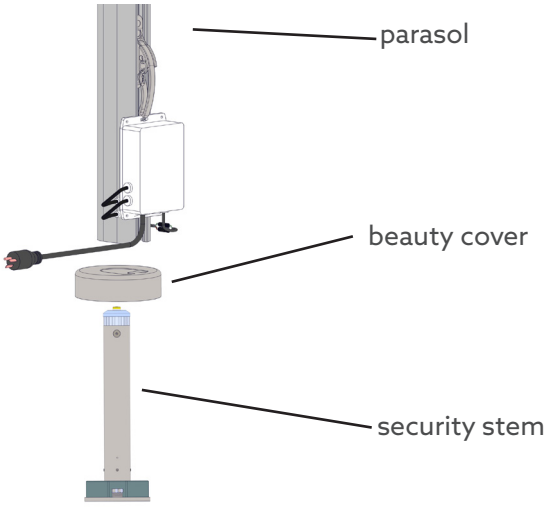

Step 8
Lock parasol down by pushing the cam lock handles in the down position and lock with pin. Mount beauty cover over control box.

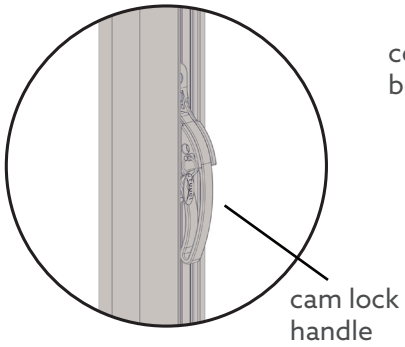

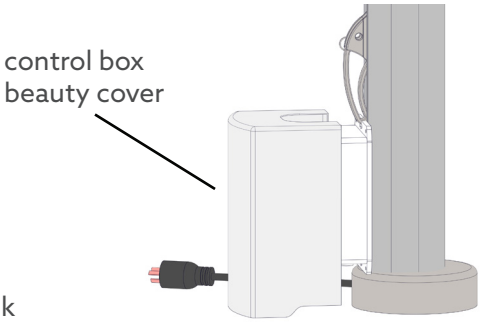

AMBIA™ LED LIGHTS | HEATERS | AUTOMATION

Step 9
Plug in power cord of your Automated Parasol into 220V receptacles. The TUUCI logo on control panel will be back-lit in white when the parasol is properly plugged into the power source.

Step 10
Press the Power button to turn on the parasol. The button will be backlit in red when the power is ON. In addition, when the parasol is ON, the open parasol icon, closed parasol icon, Ambia LED Light icon and heater icon will all be backlit in white.

Step 11
Press the close parasol button to move the parasol down to align with the eye of the cable connector. Press the close parasol button again to stop the movement.

Step 12
a) Pull the security pin from the trolley car bracket.
b) Pull the cable connector so it aligns with the trolley car bracket.
c) Fasten the cable connecter to the trolley car bracket with the security pin.

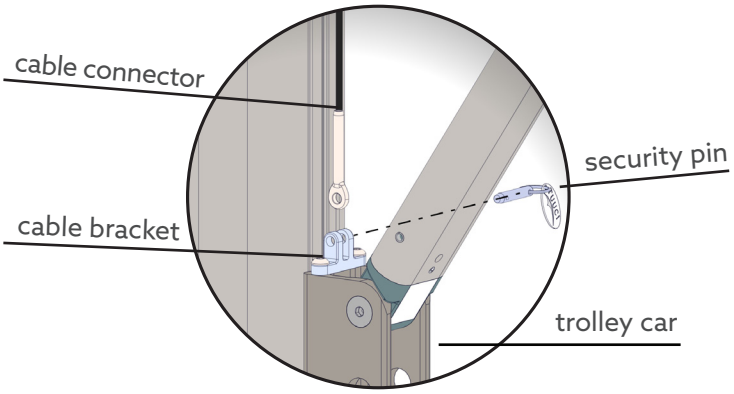

Step 13
Gently separate each rib individually from the center hub approximately 10 inches. If the rib does not move easily, do not force. Inspect the product for additional packaging.

Step 14
Gently separate the heater arms.
Note: Heater arms must be separated before opening the parasol.

Caution:
Ensure that your parasol is level (not tipped or tilted). For safety reasons, if the parasol is tipped, you will not be able to open or close the parasol and turn-on the Ambia LED light.

Ensure that there is nothing blocking the canopy of the parasol from being fully opened. For safety purposes, the motor has a built-in stop feature if the canopy bumps into an object when opening or closing.

AMBIA™ LED LIGHTS | HEATERS | AUTOMATION

OPENING parasol

Opening parasol
Press the open parasol icon button to open the parasol. The color will change from white to blue after pressing the button and during the opening of the parasol.

When it is fully opened, the button color will change to white. The parasol must be fully opened for 5 seconds before the Ambia LED light can be turned on.

Turning the Ambia LED light on
Press the Ambia LED lightbulb icon button to turn on the Ambia LED light. The color will change from white to blue after pressing the button, signaling that the Ambia LED light is ON.

Turning the heaters on
Press the heater icon button to turn on the heaters. The color will change from white to blue, signaling that both heaters are ON.

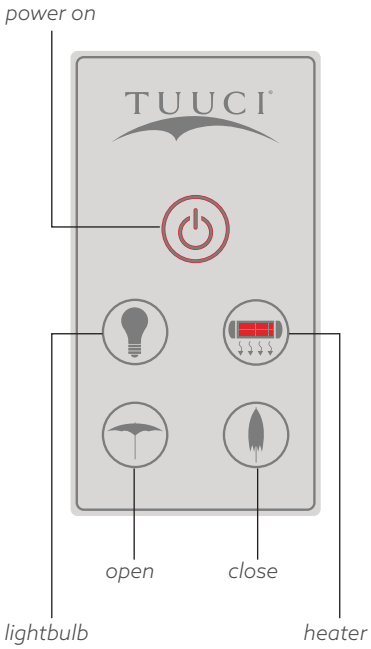

CLOSING parasol

Instructions to close the automated parasol and turn off the Ambia LED light and (2) heaters.

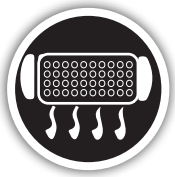

Step 1
Press the heater icon button to turn off both heaters. After pressing the button, the color will change to white, signaling that both heaters are OFF.

Step 2
Press the Ambia LED Lightbulb icon button to turn off the Ambia LED Light. After pressing the button, the color will change to white, signaling that the Ambia LED Light is OFF.

Step 3
Press the close parasol icon button to close the parasol. After pressing the button, the color will change from white to blue, signaling that the parasol will be closing.

When the parasol is fully closed, the close parasol icon color will change to white.

Step 4
Press power button to turn off the parasol.

Step 5
Close the parasol with tie-back when not in use.

Note:
Close with cooling delay – As a safety precaution, if the heaters were ON up to two minutes prior to closing the parasol, the heaters will go through an automatic cool-down period prior to the parasol closing. The heater icon Ambia LED Light on the control panel will flash, signaling the cooling delay period has started. When the cooling delay period is completed, the heater icon button will stop flashing and the parasol will close automatically.

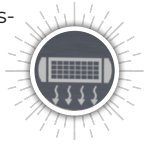

The duration of the cool-down period depends on how long the heaters were OFF prior to closing.

Close without cooling delay – If the heaters were never turned on, or if the heaters were turned OFF two minutes prior to pressing the close parasol icon button, the cooling time delay will not activate, and the parasol will close immediately.

Note: Close parasol during consistent wind conditions that exceed 25mph.

AMBIA™ LED LIGHTS | HEATERS | AUTOMATION

Emergency shut-down or interrupt feature on the automated parasol control panel

Press the Power button to shut-down or interrupt the operation of any function (Ambia LED Light, heaters, open and close). The red light on the Power button will turn OFF. The light icon and open and close icon buttons will turn OFF. Press the Power button to turn the parasol back ON.

Control panel indicator when the automated parasol is not level (tipped or tilted on an angle)

The Power button will be flashing in yellow when the parasol is not level. All functions (open, close, Ambia LED Ambia™ LED Light and heaters) are inactive. The TUUCI logo is not backlit. When the parasol is level and no longer tipped or tilted, it will return to a powered-down state with the TUUCI logo backlit in white and all other functions OFF. Press the Power button to turn on the parasol. Then, turn on the various functions.

Lock out unauthorized users from turning on or off various features of the automated parasol

There is a lock-out feature to prevent unauthorized user access. To turn on the lock-out feature, press and hold the Power button for 5 seconds. All functions (Ambia LED light, heaters, open and close) will maintain their original state of ON or OFF. The power button will be a solid yellow when the lock-out feature is activated.

To turn off the lock-out feature, press and hold the Power button for 5 seconds. All functions (Ambia LED light, heaters, open and close) will maintain their current state of ON or OFF. Users will have access again to turn the various functions on or off.

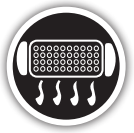

If the Power button is pressed during a lock-out condition, activating the emergency shut-down or interrupt feature, the Ambia LED Light, heaters, open and close parasol features will be turned-off. All icon buttons will be OFF except for the TUUCI logo.

Closing the automated parasol if there is an extended power outage

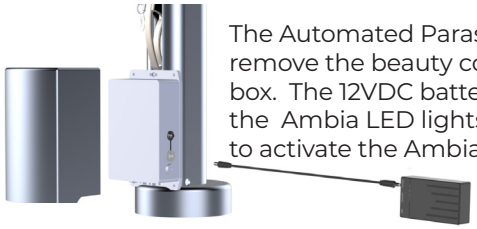

The Automated Parasol comes standard with a 12V back-up battery. Unplug power cord and remove the beauty cover that conceals the control box. Plug the battery into the control box. The 12VDC battery will provide power to open or close the parasol and to Turn ON/OFF the Ambia LED lights when the AC power source is not available. Parasol must be fully open to activate the Ambia LED lights.

Light Unit, (2) Heaters and Automation:

Power Supply:	
Main Input Voltage:	208-240VAC 50/60 Hz
Max. Amps:	13.7 A @220Volts AC 12.6 A @240Volts AC
Max. Watts:	3010 Watts

North America version:
208-240V, 2 phases 60Hz (requires a minimum 15 Amp circuit)
Parasol comes with 10ft Power Cord & Plug
(Use with 20A - 250 Volts, NEMA 6-20R Receptacle compatible with NEMA 6-20P Plugs)

Europe version:
220-240V, 1 phase 50Hz (requires a minimum 16 Amp circuit)
Parasol comes with 10ft Power Cord & Plug
(Use with 16A - 250 Volts, Schuko Receptacle compatible with Schuko 16A - 250 Volts Plug)

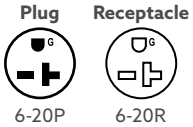

Customer must connect to a protected power source circuit with proper Current Rating "Amps", near the parasol, using an above-ground Junction box, according to their local electrical codes and regulations.

Warnings & Safety Instructions

1. Read and understand entire owner's manual before assembling or operating parasol.
2. Read and understand the warnings posted on the parasol and/or components installed on the parasol.
3. Disconnect electrical power to parasol during inclement weather.
4. There is a risk of fire if heaters contact flammable materials or liquids.
5. Keep children away from power cords on or around parasol.
6. Disconnect power before removing or servicing parasol.
7. Allow sufficient cooling of heaters before closing parasol.
8. Do not use this parasol for anything other than its intended use.
9. Replace warning labels if they become obscured or removed.
10. Make sure the parasol is properly grounded if there are electrical devices installed, such as heaters.
11. Provide for adequate space to open and close parasol without obstructions.
12. Customer's electrical power source connections, if any, must be installed / connected by a certified electrician. Check local codes for guidance.
13. When closing / opening parasol, keep hands and face clear of all pinch points or protruding parasol components.

For frequently asked questions, visit tuuci.com/automationCL